Corrosion Resistant Bearing Inserts LDK®

SSA Standard duty, Stainless steel,Narrow inner ring,Eccentric locking, Factory-Lubed with food grade grease and with silicon rubber seal.



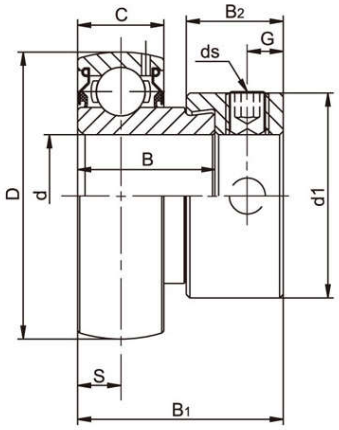

SSA200

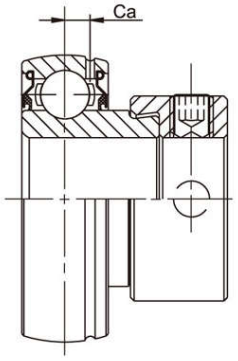

SSA200G


H TYPE SEAL


J TYPE SEAL

Bearing No.	Shaft Dia d		Dimensions(mm)								ds		Ca	Load rating (KN)		Weight (kg)
	(in)	(mm)	D	B	C	S	B1	B2	d1	G	(mm)	(in.UNF)		Dynamic Cr	Static Cor	
SSA204		20	47	21.5	14	7	31	13.5	33.3	5	M6x1		4	12.82	6.65	0.21
204-12	3/4											1/4-28				
SSA205		25	52	22	15	7.5	31.5	13.5	38.1	5	M6x1		4	14.03	8.05	0.25
205-13	13/16											1/4-28				
205-14	7/8															
205-15	15/16															
205-16	1															
SSA206		30	62	23.8	16	8	35.7	15.9	44.5	6	M6x1		4.9	19.47	11.43	0.39
206-17	1-1/16											1/4-28				
206-18	1-1/8															
206-19	1-3/16															
206-20	1-1/4															
SSA207		35	72	25.4	17	8.5	38.9	17.5	55.6	6.5	M8x1		5.4	25.69	15.55	0.6
207-20	1-1/4											5/16-24				
207-21	1-5/16															
207-22	1-3/8															
207-23	1-7/16															
SSA208		40	80	30.2	18	9	43.7	18.3	60.3	6.5	M8x1		5.8	29.51	18.14	0.77
208-24	1-1/2											5/16-24				
208-25	1-9/16															
SSA209		45	85	30.2	19	9.5	43.7	18.3	63.5	6.5	M8x1		6.1	31.85	20.80	0.84
209-26	1-5/8											5/16-24				
209-27	1-11/16															
209-28	1-3/4															
SSA210		50	90	30.2	20	10	43.7	18.3	69.9	6.5	M8x1		6.5	34.99	23.70	1.02
210-30	1-7/8											5/16-24				
210-31	1-15/16															
210-32	2															
SSA211		55	100	32.5	21	10.5	48.4	20.7	76.2	8	M10x1.25		7	43.34	29.39	1.37
211-32	2											3/8-24				
211-33	2-1/16															
211-34	2-1/8															
211-35	2-3/16															
SSA212		60	110	37.2	22	11	53.1	22.3	84.2	8	M10x1.25		7.3	47.68	33.43	1.85
212-36	2-1/4											3/8-24				
212-37	2-5/16															
212-38	2-3/8															
212-39	2-7/16															