LDK® Pillow Blocks

UCSB Standard duty,Wider inner ring bearing,Setscrew locking



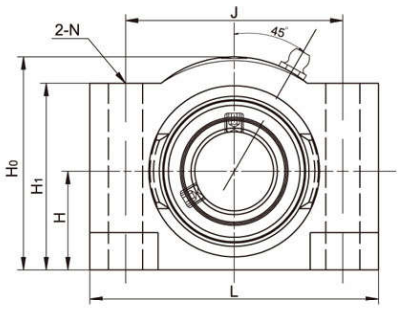

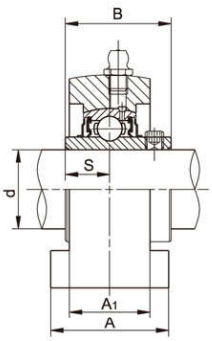

Unit No.	Shaft Dia d		Dimensions (mm)										Bolt Size		Weight (kg)
	(in)	(mm)	H	L	J	A	A_1	H_1	H_0	N	B	S	(mm)	(in)	
UCSB205		25													
205-13	13/16														
205-14	7/8		31.7	92	70	38	25	58	67	12	34.1	14.3	M10	3/8	1.03
205-15	15/16														
205-16	1														
UCSB206		30													
206-17	1-1/16														
206-18	1-1/8		38.1	108	83	44	30	68	78	12	38.1	15.9	M10	3/8	1.63
206-19	1-3/16														
206-20	1-1/4														
UCSB207		35													
207-20	1-1/4														
207-21	1-5/16		44.4	133	102	48	33	76	95	14	42.9	17.5	M12	7/16	2.52
207-22	1-3/8														
207-23	1-7/16														
UCSB208		40													
208-24	1-1/2		47.6	140	108	54	39	81	100	14	49.2	19	M12	7/16	3.12
208-25	1-9/16														
UCSB209		45													
209-26	1-5/8														
209-27	1-11/16		50.8	146	111	54	39	86	105	14	49.2	19	M12	7/16	3.43
209-28	1-3/4														
UCSB210		50													
210-29	1-13/16														
210-30	1-7/8		53.97	152	118	60	41	90	110	14	51.6	19	M12	7/16	3.95
210-31	1-15/16														
210-32	2														
UCSB211		55													
211-32	2														
211-33	2-1/16		58.7	172	137	60	41	98	122	17	55.6	22.2	M16	5/8	4.92
211-34	2-1/8														
211-35	2-3/16														
UCSB212		60													
212-36	2-1/4														
212-37	2-5/16		69.85	197	162	65	48	111	146	17	65.1	25.4	M16	5/8	7.03
212-38	2-3/8														
212-39	2-7/16														
UCSB213		65													
213-40	2-1/2		69.85	197	162	65	48	111	146	17	65.1	25.4	M16	5/8	7.62
213-41	2-9/16														
UCSB214		70													
214-42	2-5/8		76.2	206	172	73	60	117	155	17	74.6	30.2	M16	5/8	8.18
214-43	2-11/16														
214-44	2-3/4														
UCSB215		75													
215-45	2-13/16														
215-46	2-7/8		76.2	206	172	73	55	117	155	17	77.8	33.3	M16	5/8	8.42
215-47	2-15/16														
215-48	3														
UCSB216		80	82.55	238	191	86	64	127	168	21	82.6	33.3	M20	3/4	10.55
216-50	3-1/8														
UCSB217		85	88.9	254	203	89	64	136	181	21	85.7	34.1	M20	3/4	13
217-52	3-1/4														
UCSB218		90	98.4	273	222	92	67	152	200	25	96	39.7	M24		16.29
218-56	3-1/2														
UCSBX20		100													
20-63	3-15/16		108	298	241	108	70	178	221	26	108	49.2	M24		23.52
20-64	4														