## UER Standard duty,With cylindrical outer ring and snap ring,Concentric locking



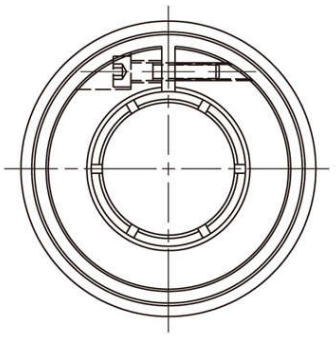

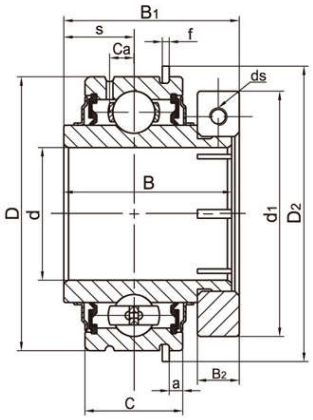




SL TYPE SEAL



TJ TYPE SEAL

| Bearing No. | Shaft Dia d | | Dimensions (mm) | | | | | | | | | | | | Load rating (KN) | | Weight kg |
|---|---|---|---|---|---|---|---|---|---|---|---|---|---|---|---|---|---|
| | (in) | (mm) | D | B | C | S | B1 | B2 | a | f | D2 (max) | d1 | ds | Ca | Dynamic | Static | |
| UER204 | | 20 | 47 | 31 | 15.9 | 10.3 | 33 | 9.5 | 2.38 | 1.07 | 52.7 | 40.8 | M4 | 4.05 | 12.82 | 6.65 | 0.22 |
| 204-12 | 3/4 | | | | | | | | | | | | | | | | |
| UER205 | | 25 | 52 | 34.9 | 19 | 13.1 | 35.4 | 9.5 | 2.38 | 1.07 | 57.9 | 49 | M4 | 5.5 | 14.03 | 8.05 | 0.28 |
| 205-13 | 13/16 | | | | | | | | | | | | | | | | |
| 205-14 | 7/8 | | | | | | | | | | | | | | | | |
| 205-15 | 15/16 | | | | | | | | | | | | | | | | |
| 205-16 | 1 | | | | | | | | | | | | | | | | |
| UER206 | | 30 | 62 | 38.1 | 22.2 | 15.9 | 39.8 | 9.5 | 3.18 | 1.65 | 67.7 | 55.5 | M4 | 5.5 | 19.47 | 11.43 | 0.38 |
| 206-17 | 1-1/16 | | | | | | | | | | | | | | | | |
| 206-18 | 1-1/8 | | | | | | | | | | | | | | | | |
| 206-19 | 1-3/16 | | | | | | | | | | | | | | | | |
| 206-20 | 1-1/4 | | | | | | | | | | | | | | | | |
| UER207 | | 35 | 72 | 42.9 | 23.8 | 17.5 | 43.9 | 11 | 3.18 | 1.65 | 78.6 | 64 | M5 | 6.3 | 25.69 | 15.55 | 0.56 |
| 207-20 | 1-1/4 | | | | | | | | | | | | | | | | |
| 207-21 | 1-5/16 | | | | | | | | | | | | | | | | |
| 207-22 | 1-3/8 | | | | | | | | | | | | | | | | |
| 207-23 | 1-7/16 | | | | | | | | | | | | | | | | |
| UER208 | | 40 | 80 | 49.2 | 27.8 | 19 | 50.2 | 11 | 3.18 | 1.65 | 86.6 | 68 | M5 | 7.5 | 29.51 | 18.14 | 0.87 |
| 208-24 | 1-1/2 | | | | | | | | | | | | | | | | |
| 208-25 | 1-9/16 | | | | | | | | | | | | | | | | |
| UER209 | | 45 | 85 | 49.2 | 27.8 | 19 | 50.2 | 11 | 3.18 | 1.65 | 91.6 | 74 | M5 | 7.5 | 31.85 | 20.80 | 0.95 |
| 209-26 | 1-5/8 | | | | | | | | | | | | | | | | |
| 209-27 | 1-11/16 | | | | | | | | | | | | | | | | |
| 209-28 | 1-3/4 | | | | | | | | | | | | | | | | |
| UER210 | | 50 | 90 | 51.6 | 28.6 | 19 | 52.6 | 14.5 | 3.18 | 2.41 | 96.5 | 81 | M6 | 6.8 | 34.99 | 23.70 | 1.03 |
| 210-30 | 1-7/8 | | | | | | | | | | | | | | | | |
| 210-31 | 1-15/16 | | | | | | | | | | | | | | | | |
| 210-32 | 2 | | | | | | | | | | | | | | | | |
| UER211 | | 55 | 100 | 55.6 | 30.2 | 22.2 | 55.6 | 14.5 | 3.18 | 2.41 | 106.5 | 92 | M6 | 7.6 | 43.34 | 29.39 | 1.21 |
| 211-32 | 2 | | | | | | | | | | | | | | | | |
| 211-33 | 2-1/16 | | | | | | | | | | | | | | | | |
| 211-34 | 2-1/8 | | | | | | | | | | | | | | | | |
| 211-35 | 2-3/16 | | | | | | | | | | | | | | | | |
| UER212 | | 60 | 110 | 65.1 | 31.8 | 25.4 | 66.6 | 17.4 | 3.18 | 2.41 | 116.6 | 103 | M8 | 8.4 | 47.68 | 33.43 | 1.68 |
| 212-36 | 2-1/4 | | | | | | | | | | | | | | | | |
| 212-37 | 2-5/16 | | | | | | | | | | | | | | | | |
| 212-38 | 2-3/8 | | | | | | | | | | | | | | | | |
| 212-39 | 2-7/16 | | | | | | | | | | | | | | | | |