NA/NA..L3 Standard duty, Wider inner ring,Eccentric locking



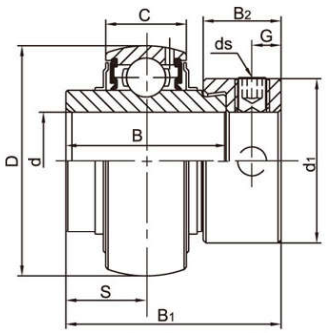

NA200(HC200 UEL200)

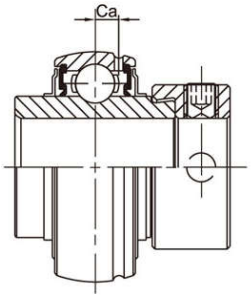

NA200G


SL TYPE SEAL


TJ TYPE SEAL


L3 TYPE SEAL

Bearing No.	Shaft Dia d		Dimensions(mm)								ds		Ca	Basic dynamic Load ratings (KN)	Basic static Load ratings (KN)	Weight (kg)
	(in)	(mm)	D	B	C	S	B1	B2	d1	G	(mm)	(in.UNF)				
NA204		20	47	34.2	17	17.1	43.7	13.5	33.3	5	M6X1	1/4-28	4.3	12.82	6.65	0.21
204-12	3/4															
NA205		25	52	34.9	17	17.5	44.4	13.5	38.1	5	M6X1	1/4-28	4	14.03	8.05	0.25
205-14	7/8															
205-15	15/16															
205-16	1															
NA206		30	62	36.5	19	18.3	48.4	15.9	44.5	6	M6X1	1/4-28	5.3	19.47	11.43	0.39
206-17	1-1/16															
206-18	1-1/8															
206-19	1-3/16															
206-20	1-1/4															
NA207		35	72	37.6	20	18.8	51.1	17.5	55.6	6.5	M8X1	5/16-24	5.8	25.69	15.55	0.60
207-20	1-1/4															
207-21	1-5/16															
207-22	1-3/8															
207-23	1-7/16															
NA208		40	80	42.8	21	21.4	56.3	18.3	60.3	6.5	M8X1	5/16-24	6.2	29.51	18.14	0.77
208-24	1-1/2															
208-25	1-9/16															
NA209		45	85	42.8	22	21.4	56.3	18.3	63.5	6.5	M8X1	5/16-24	6.5	31.85	20.80	0.84
209-26	1-5/8															
209-27	1-11/16															
209-28	1-3/4															
NA210		50	90	49.2	24	24.6	62.7	18.3	69.9	6.5	M8X1	5/16-24	7	34.99	23.70	1.02
210-30	1-7/8															
210-31	1-15/16															
210-32	2															
NA211		55	100	55.5	25	27.80	71.4	20.7	76.2	8	M10X1.25	3/8-24	7.4	43.34	29.39	1.37
211-32	2															
211-33	2-1/16															
211-34	2-1/8															
211-35	2-3/16															
NA212		60	110	61.9	27	31.00	77.8	22.3	84.2	8	M10X1.25	3/8-24	7.6	47.68	33.43	1.85
212-36	2-1/4															
212-37	2-5/16															
212-38	2-3/8															
212-39	2-7/16															
NA213		65	120	68.6	28	34.30	85.7	23.5	86	8.5	M10X1.25	3/8-24	8.5	57.20	40.01	2.10
213-39	2-7/16															
213-40	2-1/2															
NA214		70	125	68.6	29	34.30	85.7	23.5	90	8.5	M10X1.25	3/8-24	8.9	62.19	43.90	2.34
214-43	2-11/16															
214-44	2-3/4															
NA215		75	130	75	30	37.3	92.1	23.5	102	8.5	M10X1.25	3/8-24	9.2	62.08	44.82	2.50
215-47	2-15/16															
215-48	3															