LDK® All Stainless Steel Bearing Units

SSUCPA All stainless steel pillow blocks tapped base,Setscrew locking



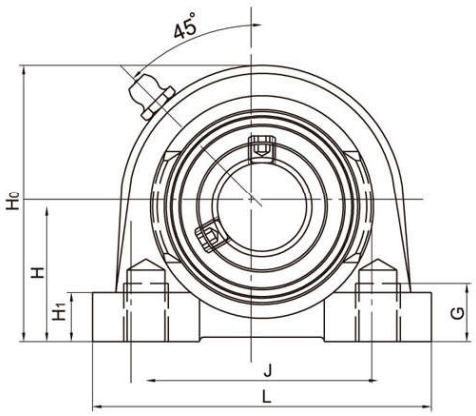

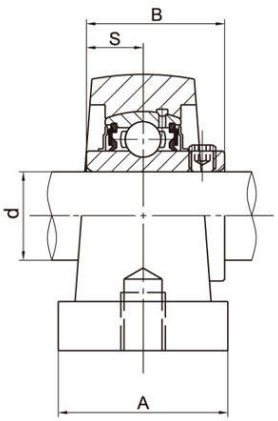

Unit No.	Shaft Dia d (in)	Shaft Dia d (mm)	H	L	J	A	G	H1	H0	B	S	Bolt Size (mm)	Weight (kg)
SSUCPA204		20	30.2	76	52	38	13	11	62	31.0	12.7	M10	0.62
204-12	3/4												
SSUCPA205		25	36.5	84	56	38	15	12	72	34.1	14.3	M10	0.78
205-14	7/8												
205-15	15/16												
205-16	1												
SSUCPA206		30	42.9	94	66	48	18	12	84	38.1	15.9	M14	1.24
206-17	1-1/16												
206-18	1-1/8												
206-19	1-3/16												
206-20	1-1/4												
SSUCPA207		35	47.6	110	80	48	20	13	95	42.9	17.5	M14	1.70
207-20	1-1/4												
207-21	1-5/16												
207-22	1-3/8												
207-23	1-7/16												
SSUCPA208		40	49.2	116	84	54	20	13	100	49.2	19.0	M14	1.90
208-24	1-1/2												
208-25	1-9/16												
SSUCPA209		45	54.2	120	90	54	25	13	108	49.2	19.0	M14	2.20
209-26	1-5/8												
209-27	1-11/16												
209-28	1-3/4												
SSUCPA210		50	57.2	130	94	60	25	14	116	51.6	19.0	M16	2.60
210-30	1-7/8												
210-31	1-15/16												
210-32	2												

Notes: 1.Upon request,available with plastic close cap(CC) or open cap(OC) at one end. Ordering example SSUCPA204-12 CC.
2.Lubricated with food grade grease.