LDK® Bearing Inserts

SER Standard duty,With cylindrical outer ring and snap ring,Setscrew locking



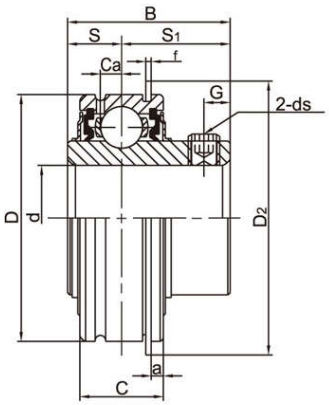


SL TYPE SEAL


TJ TYPE SEAL

Bearing No.	Shaft Dia d		Dimensions (mm)									ds		Ca	Basic Load Rating KN		Weight (kg)
	(in)	(mm)	D	B	C	S	S1	a	r	D2 (Max.)	G	(mm)	(in.UNF)		Dynamic Cr	Static Cor	
SER 201 201-8	1/2	12	47	31	15.9	10.3	20.7	2.38	1.07	52.7	5	M6X1	1/4-28	4.05	9.55	4.78	0.27
SER 202 202-9 202-10	9/16 5/8	15	47	31	15.9	10.3	20.7	2.38	1.07	52.7	5	M6X1	1/4-28	4.05	9.55	4.78	0.25
SER 203 203-11	11/16	17	47	31	15.9	10.3	20.7	2.38	1.07	52.7	5	M6X1	1/4-28	4.05	9.55	4.78	0.23
SER 204 204-12	3/4	20	47	31	15.9	10.3	20.7	2.38	1.07	52.7	5	M6X1	1/4-28	4.05	12.82	6.65	0.22
SER 205 205-13 205-14 205-15 205-16	13/16 7/8 15/16 1	25	52	34.9	19	13.1	21.8	2.38	1.07	57.9	5.3	M6X1	1/4-28	5.5	14.03	8.05	0.28
SER 206 206-17 206-18 206-19 206-20	1-1/16 1-1/8 1-3/16 1-1/4	30	62	38.1	22.2	15.9	22.2	3.18	1.65	67.7	5.5	M6X1	1/4-28	5.5	19.47	11.43	0.38
SER 207 207-20 207-21 207-22 207-23	1-1/4 1-5/16 1-3/8 1-7/16	35	72	42.9	23.8	17.5	25.4	3.18	1.65	78.6	6.4	M8X1	5/16-24	6.3	25.69	15.55	0.56
SER 208 208-24 208-25	1-1/2 1-9/16	40	80	49.2	27.8	19	30.2	3.18	1.65	86.6	8	M8X1	5/16-24	7.5	29.51	18.14	0.87
SER 209 209-26 209-27 209-28	1-5/8 1-11/16 1-3/4	45	85	49.2	27.8	19	30.2	3.18	1.65	91.6	8	M8X1	5/16-24	7.5	31.85	20.80	0.95
SER 210 210-30 210-31 210-32	1-7/8 1-15/16 2	50	90	51.6	28.6	19	32.6	3.18	2.41	96.5	10	M10X1.25	3/8-24	6.8	34.99	23.70	1.03
SER 211 211-32 211-33 211-34 211-35	2 2-1/16 2-1/8 2-3/16	55	100	55.6	30.2	22.2	33.4	3.18	2.41	106.5	10	M10X1.25	3/8-24	7.6	43.34	29.39	1.21
SER 212 212-36 212-37 212-38 212-39	2-1/4 2-5/16 2-3/8 2-7/16	60	110	65.1	31.8	25.4	39.7	3.18	2.41	116.6	10	M10X1.25	3/8-24	8.4	47.68	33.43	1.68