Corrosion Resistant Bearing Inserts LDK®

SUER Standard duty,Stainlesss steel,With cylindrical outer ring and snap ring,Concentric locking, Factory-Lubed with food grade grease and with silicon rubber seal.



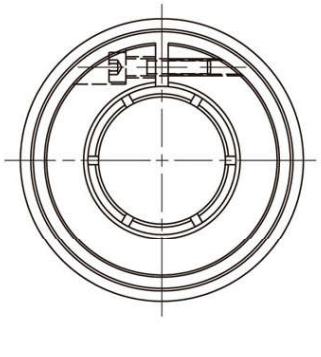


SL TYPE SEAL


TJ TYPE SEAL

Bearing No.	Shaft Dia d		Dimensions (mm)												Load rating (KN)		Weight kg
	(in)	(mm)	D	B	C	S	B1	B2	a	f	D2 (max)	d1	ds	Ca	Dynamic	Static	
SUER204		20	47	31	15.9	10.3	33	9.5	2.38	1.07	52.7	40.8	M4	4.05	12.82	6.65	0.22
204-12	3/4																
SUER205		25	52	34.9	19	13.1	35.4	9.5	2.38	1.07	57.9	49	M4	5.5	14.03	8.05	0.28
205-13	13/16																
205-14	7/8																
205-15	15/16																
205-16	1																
SUER206		30	62	38.1	22.2	15.9	39.8	9.5	3.18	1.65	67.7	55.5	M4	5.5	19.47	11.43	0.38
206-17	1-1/16																
206-18	1-1/8																
206-19	1-3/16																
206-20	1-1/4																
SUER207		35	72	42.9	23.8	17.5	43.9	11	3.18	1.65	78.6	64	M5	6.3	25.69	15.55	0.56
207-20	1-1/4																
207-21	1-5/16																
207-22	1-3/8																
207-23	1-7/16																
SUER208		40	80	49.2	27.8	19	50.2	11	3.18	1.65	86.6	68	M5	7.5	29.51	18.14	0.87
208-24	1-1/2																
208-25	1-9/16																
SUER209		45	85	49.2	27.8	19	50.2	11	3.18	1.65	91.6	74	M5	7.5	31.85	20.80	0.95
209-26	1-5/8																
209-27	1-11/16																
209-28	1-3/4																
SUER210		50	90	51.6	28.6	19	52.6	14.5	3.18	2.41	96.5	81	M6	6.8	34.99	23.70	1.03
210-30	1-7/8																
210-31	1-15/16																
210-32	2																
SUER211		55	100	55.6	30.2	22.2	55.6	14.5	3.18	2.41	106.5	92	M6	7.6	43.34	29.39	1.21
211-32	2																
211-33	2-1/16																
211-34	2-1/8																
211-35	2-3/16																
SUER212		60	110	65.1	31.8	25.4	66.6	17.4	3.18	2.41	116.6	103	M8	8.4	47.68	33.43	1.68
212-36	2-1/4																
212-37	2-5/16																
212-38	2-3/8																
212-39	2-7/16																

http://www.ldk-bearings.com