TP-SUCF Thermoplastic flange 4-bolt,Solid base housing,Stainless steel inserts, With food grade grease and silicon rubber seal,Setscrew locking



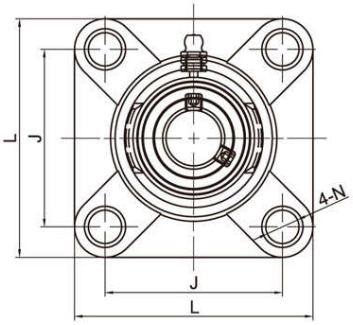

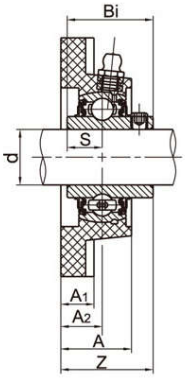

Unit No.	Shaft Dia d (in)	Shaft Dia d (mm)	L	J	A2	A1	A	N	B	S	Z	Bolt Size (mm)	Weight (kg)
TP-SUCF201		12	86	63.5	18	13.4	27.8	11	31	12.7	36.3	M10	0.29
201-8	1/2												
TP-SUCF202		15	86	63.5	18	13.4	27.8	11	31	12.7	36.3	M10	0.29
202-9	9/16												
202-10	5/8												
TP-SUCF203		17	86	63.5	18	13.4	27.8	11	31	12.7	36.3	M10	0.29
203-11	11/16												
TP-SUCF204		20	86	63.5	18	13.4	27.8	11	31	12.7	36.3	M10	0.29
204-12	3/4												
TP-SUCF205		25	95	70	17	14	28	11	34.1	14.3	36.7	M10	0.32
205-14	7/8												
205-15	15/16												
205-16	1												
TP-SUCF206		30	108	83	19.2	14.3	31.5	11	38.1	15.9	41.4	M10	0.54
206-17	1-1/16												
206-18	1-1/8												
206-19	1-3/16												
206-20	1-1/4												
TP-SUCF207		35	118	92	21.5	15.5	34.8	13	42.9	17.5	46.9	M12	0.75
207-20	1-1/4												
207-21	1-5/16												
207-22	1-3/8												
207-23	1-7/16												
TP-SUCF208		40	130	102	23	18	37.5	14	49.2	19	53.2	M12	0.99
208-24	1-1/2												
208-25	1-9/16												
TP-SUCF209		45	137	105	24	19	41	17	49.2	19	54.2	M16	1.12
209-26	1-5/8												
209-27	1-11/16												
209-28	1-3/4												
TP-SUCF210		50	143	111	25	21	43	17	51.6	19	57.6	M16	1.24
210-30	1-7/8												
210-31	1-15/16												
210-32	2												
TP-SUCF211		55	162	130	25	20	43	17	55.6	22.2	58.4	M16	1.58
211-32	2												
211-34	2-1/8												
211-35	2-3/16												
TP-SUCF212		60	175	143	29	19	48	17	65.1	25.4	68.7	M16	2.1
212-36	2-1/4												
212-38	2-3/8												
212-39	2-7/16												

MODE OF LOAD	BREAKING POINT OF HOUSINGS(N)								
	204	205	206	207	208	209	210	210	210
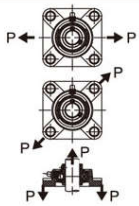	15950	16000	18000	18500	19100	19350	19650	21550	22600
	10250	12150	17700	18500	19250	19350	19650	21500	21900
	4670	6590	7250	7910	8520	9010	9600	9700	9800

Notes:Anti-Bacteria Protection Series is available by adding prefix"AB" as designation.Ordering example:ABTP-SUCF204